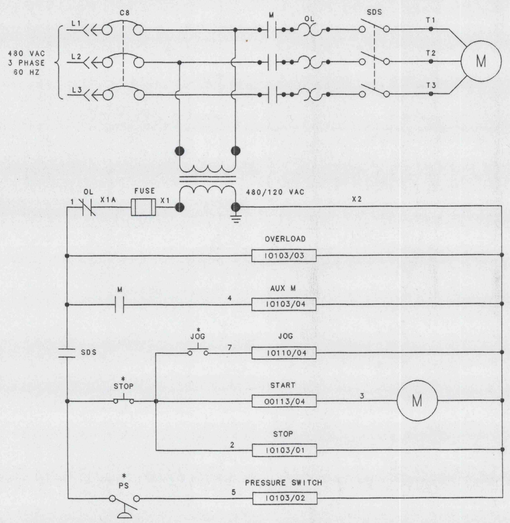

UNIT		DESCRIPTION	HP	MCC
23E		CMI OIL PUMP		

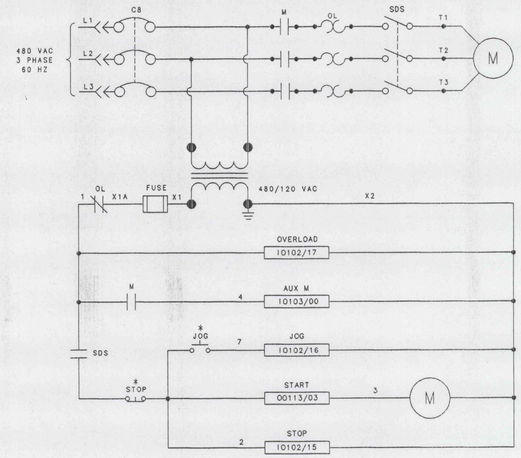

UNIT		DESCRIPTION	HP	MCC
23D		CMI OSCILLATION		

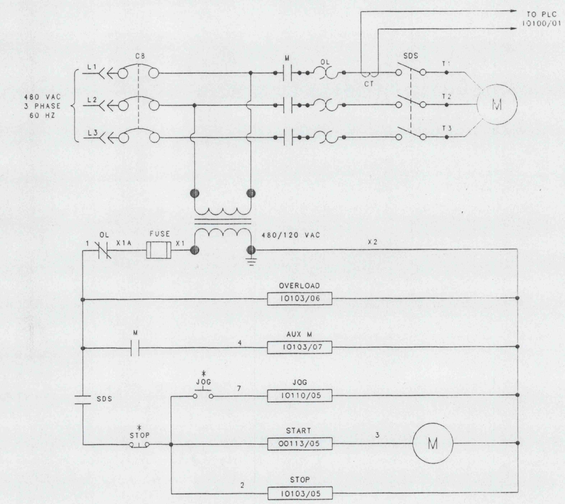

UNIT		DESCRIPTION	HP	MCC
23F		CMI ROTATION		

W.G.Electric

REVISION DESCRIPTION	MADE BY	DATE	CHECKED BY	DATE

DRAWN BY	RAH	DATE	05/12/94
DESIGNED BY		DATE	
CHECKED BY		DATE	
APPROVED BY		DATE	

ROCHESTER & PITTSBURGH COAL COMPANY
KEYSTONE COAL MINING CORP.
PREPARATION PLANT MODIFICATIONS
ELECTRICAL SCHEMATIC

NO. DWGS THIS PROJECT

SCALE	PROJECT NO.
NONE	93-123
DRAWING NO.	FILE NO.
EL-12	93-123-EL12

IMAPS 16626

A 03420