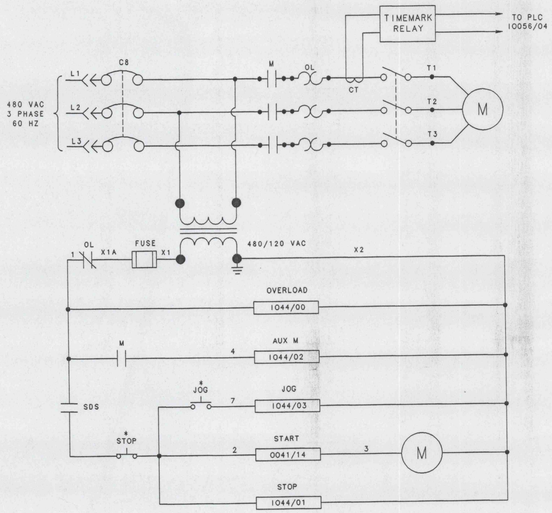

UNIT		DESCRIPTION	HP	MCC
135B		NEW CLEAN UP PUMP	25	

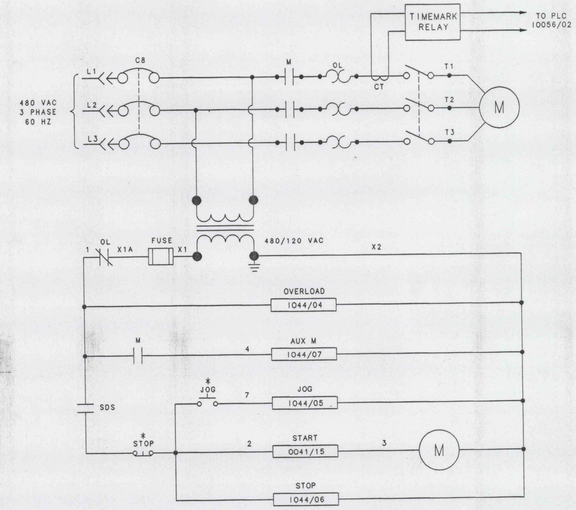

UNIT		DESCRIPTION	HP	MCC
126		CMI EFFLUENT PUMP	20	

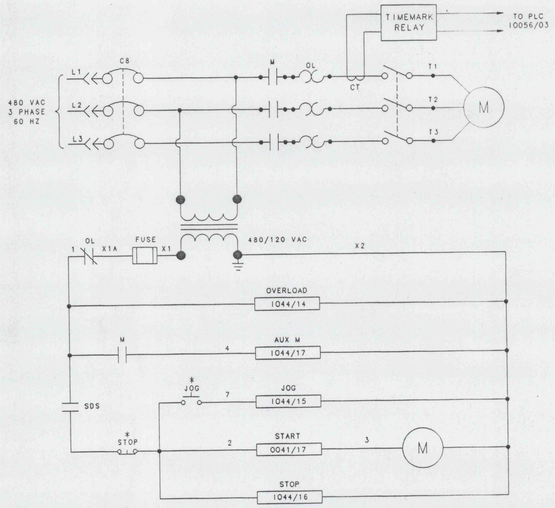

UNIT		DESCRIPTION	HP	MCC
151A		HEAVY MEDIA PUMP A	250	

W.G.Electric

REVISION DESCRIPTION	MADE BY	DATE	CHECKED BY	DATE

DRAWN BY RAH DATE 05/12/94
DESIGNED BY DATE
CHECKED BY DATE
APPROVED BY DATE

ROCHESTER & PITTSBURGH COAL COMPANY
KEYSTONE COAL MINING CORP.
PREPARATION PLANT MODIFICATIONS
ELECTRICAL SCHEMATIC

NO. DWGS THIS PROJECT

SCALE NONE
PROJECT NO. 93-123
DRAWING NO. EL-05
FILE NO. 93-123-EL5

IMAPS 16620