S. 1 8052-6

Foundation Plan
for
20"x22" Engine D.C. to 14-200-180 T.R. Dynamo
Ridgway Dynamo and Engine Co.
Ridgway, Pa. Dec. 21, 1906

Note: Bolt ends project 6" above bottom of casting.
Make proper allowance for grouting.
Leave space around bolts in pipes until engine is set, then grout with soft cement.

W.J.B.
W.S.W.

This distance necessary for removal of piston and rod

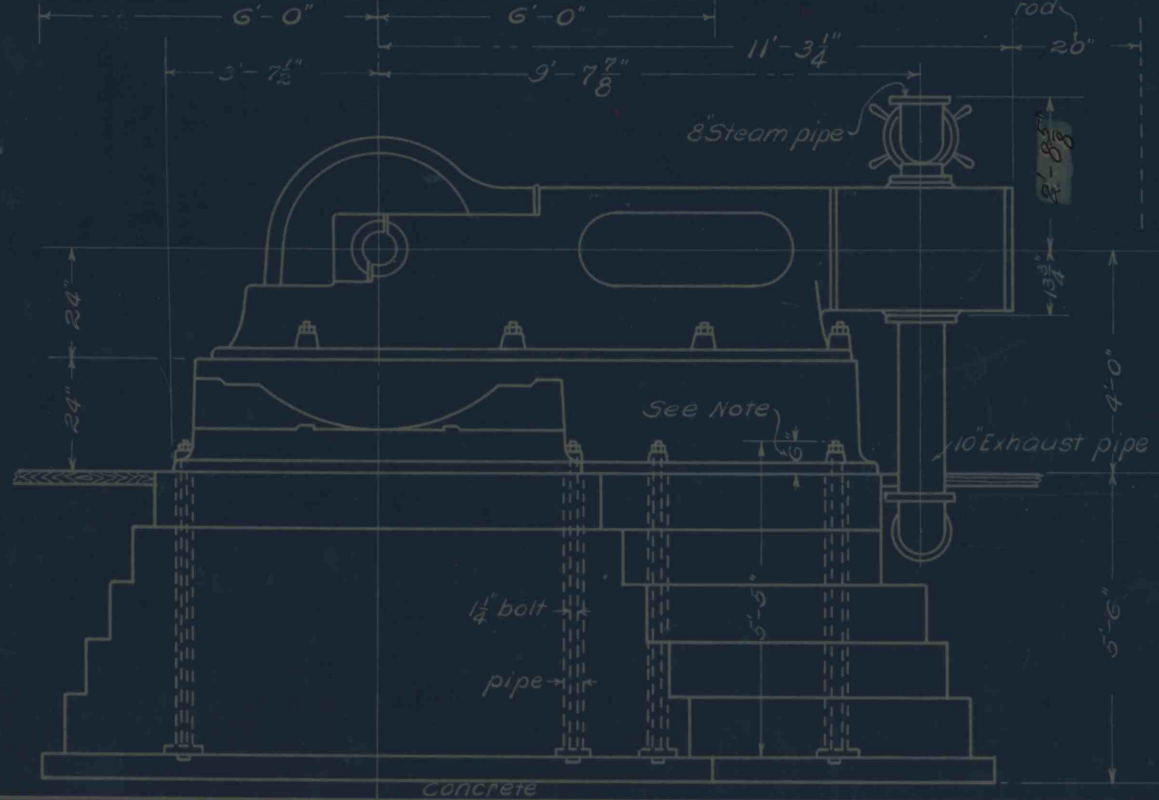

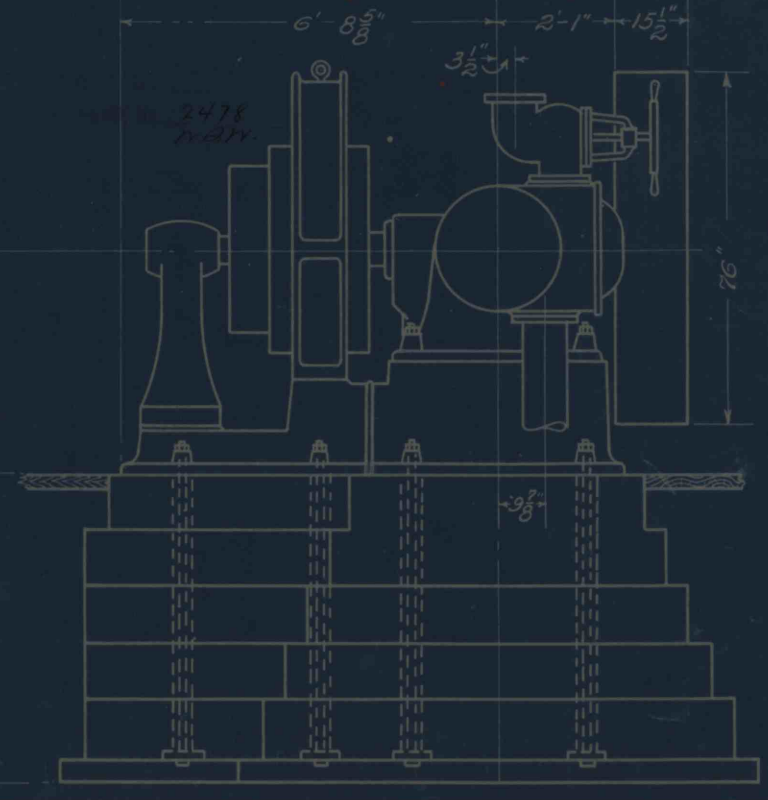

IMAPS # 14914