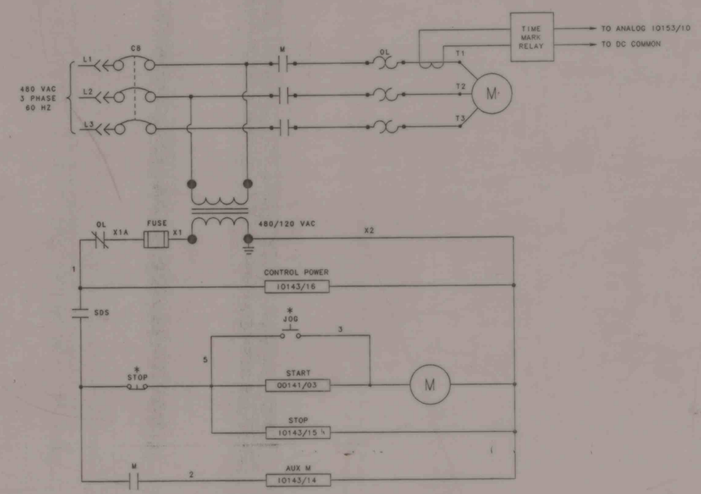

UNIT		DESCRIPTION	HP	MCC
216		SCRUBBER FEED PUMP	50	

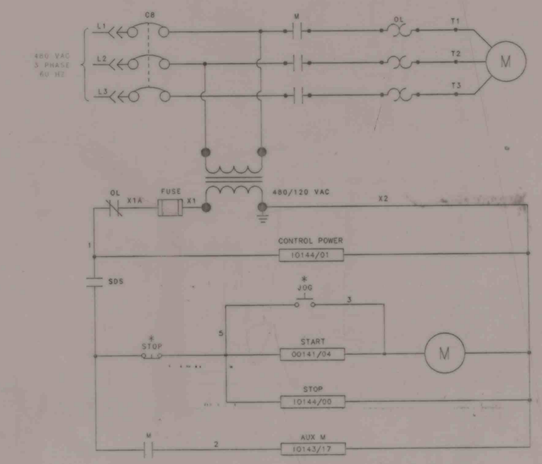

UNIT		DESCRIPTION	HP	MCC
228		SCRUBBER BOOSTER PUMP		

W.G. Electric

DRAWN BY	RAH	DATE	10/28/93	ROCHESTER & PITTSBURGH COAL CO.	NO. DWGS THIS PROJECT
DESIGNED BY		DATE		KEYSTONE COAL MINING CORP.	
CHECKED BY		DATE		PREPARATION PLANT MODIFICATIONS	
APPROVED BY		DATE		ELECTRICAL SCHEMATIC	

SCALE	PROJECT NO.
NONE	92-167
DRAWING NO.	FILE NO.
EL-14	92-167-014

IMAPS # 14158

A03806