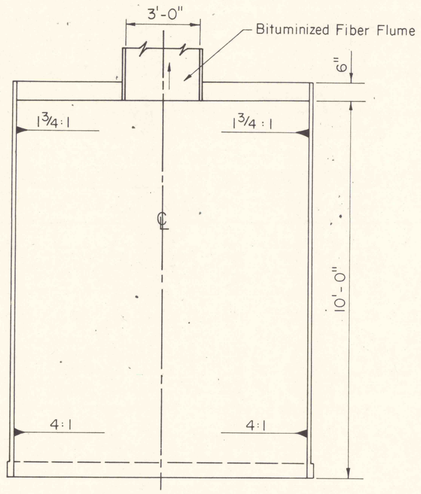

PLAN VIEW

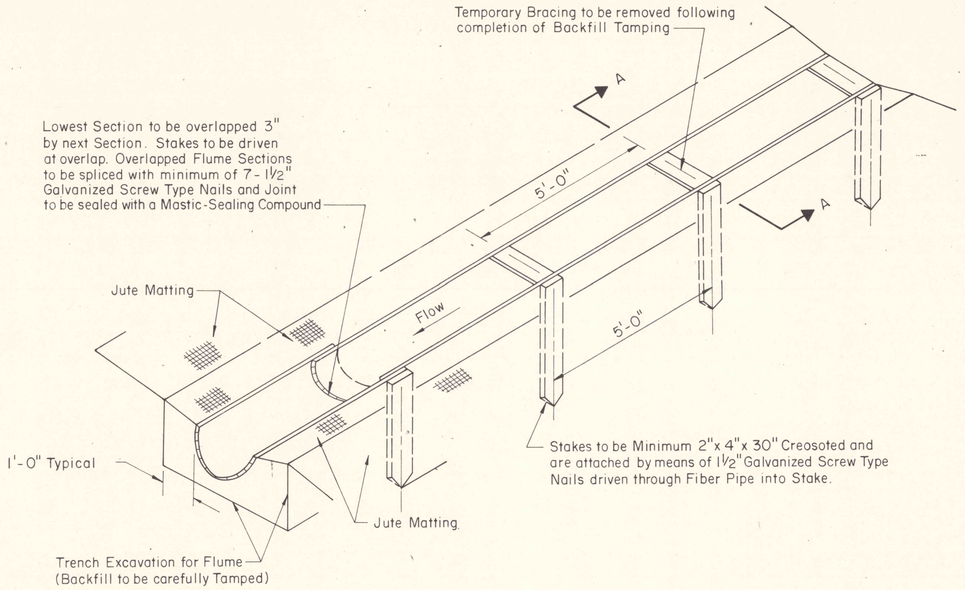

INSTALLATION OF HALF SECTION BITUMINIZED FIBER FLUME

NOT TO SCALE

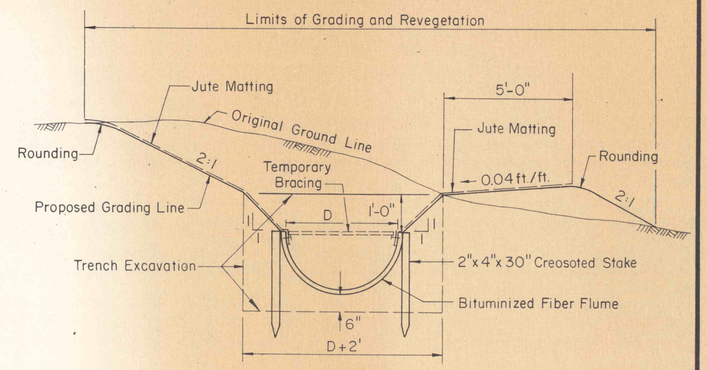

SECTION A-A

NOT TO SCALE

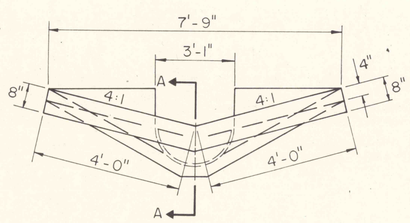

FRONT VIEW

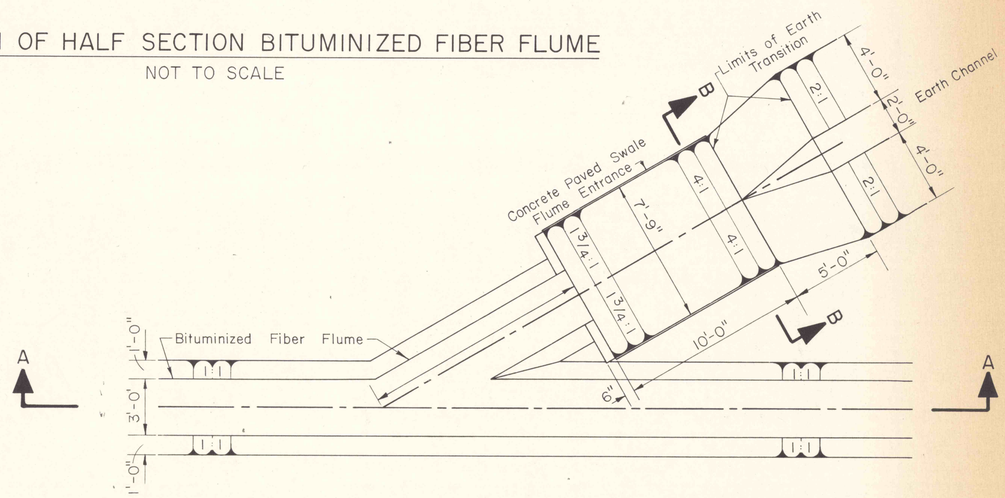

DIVERSION DITCH ENTRANCE TO BITUMINIZED FIBER FLUME

NOT TO SCALE

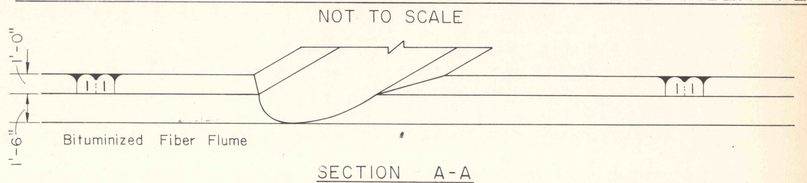

SECTION A-A

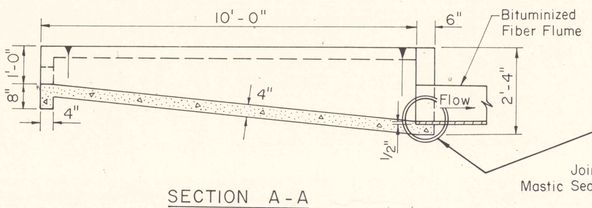

SECTION A-A

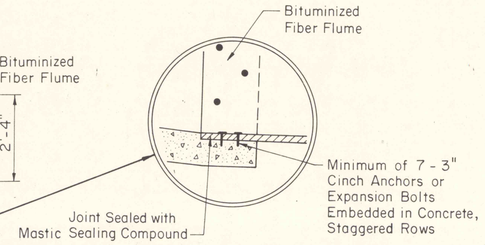

DETAIL

NO SCALE

CONCRETE PAVED SWALE FLUME ENTRANCE

SCALE : ½" = 1'-0"

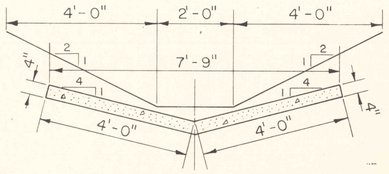

SECTION B-B

NO	DATE	REVISION	APPR.

SUBMITTED

PROFESSIONAL

APPROVED

CHIEF - DIVISION OF MINE RECLAMATION

APPROVED

DIRECTOR - BUREAU OF DESIGN

COMMONWEALTH OF PENNSYLVANIA
DEPARTMENT OF ENVIRONMENTAL RESOURCES
OFFICE OF RESOURCES MANAGEMENT

PROJECT NO. SL 113-5-1

MINE DRAINAGE POLLUTION ABATEMENT
COAL RUN
SHAMOKIN CREEK WATERSHED
NORTHUMBERLAND COUNTY, PA.

ERDMAN, ANTHONY, ASSOCIATES
Consulting Engineers
Camp Hill, Pa. Rochester, N.Y.

FIBER FLUME DETAILS

DRAWN BY	DATE	DRAWING NO.
GMS		23 of 26
CHECKED BY	SCALE	
DHC	AS SHOWN	

BRUNING 44-142 25788